COLLECTION OF ARMREST BOXES

BENZ BUSINESS

SIENNA

ELYSION & ODYSSEY

APPLY TO BENZ BUSINESS

M STYLE ARMREST BOX

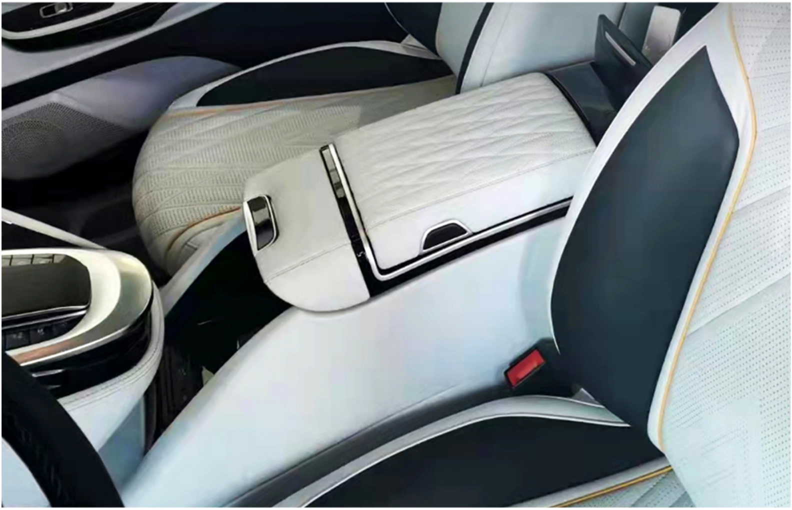

Product name:

M style

Applicable models:

Vito/V-class/Metris/W447

Optional color:

Customize

Optional specifications

Compressor refrigerator& with/without touch screen

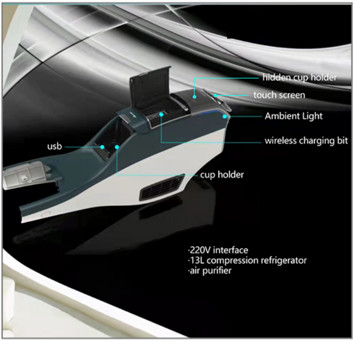
hidden cup holder
touch screen
Ambient Light
usb
wireless charging bit
cup holder
·220V interface
·13L compression refrigerator
·air purifier

BOJING ARMREST BOX

Product name:

Bo Jing style

Applicable models:

Vito/V-class/Metris/W447

Optional color:

Black/Beige

Optional specifications

Without refrigerator
compressor refrigerator

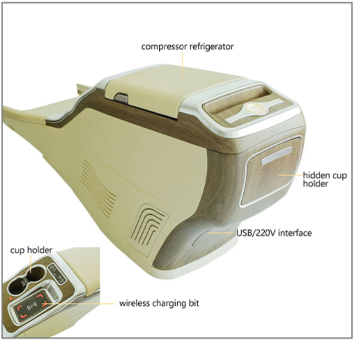
compressor refrigerator
hidden cup holder
USB/220V interface
cup holder
wireless charging bit

DEPUTY FACTORY HANDRAIL BOX

Product name:

Deputy factory

Applicable models:

Vito/V-class/Metris/W447

Optional color:

Black/Beige

Optional specifications

Without refrigerator
electronic refrigerator
compressor refrigerator

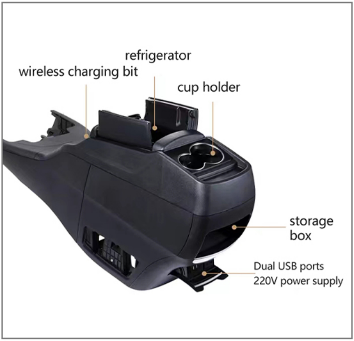
refrigerator
wireless charging bit
cup holder
storage box
Dual USB ports
220V power supply

ORIGINAL ARMREST BOX

Product name:

original factory

Applicable models:

Vito/V-class/Metris/W447

Optional color:

Black/Beige

Optional specifications

Compressor refrigerator

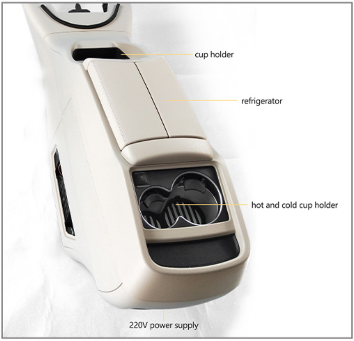
cup holder
refrigerator
hot and cold cup holder
220V power supply

SEVEN-SEAT ARMREST BOX

Product name:

Seven seats

Applicable models:

Vito/V-class/Metris/W447

Optional color:

Customize

Optional specifications

Manual/Electric & Without Refrigerator/Compressor Refrigerator

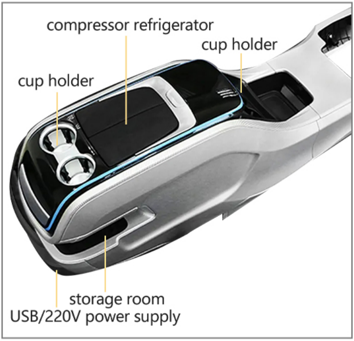
compressor refrigerator
cup holder
cup holder
storage room
USB/220V power supply

NAVIGATOR ARMREST BOX

Product name:

navigator

Applicable models:

Vito/V-class/Metris/W447

Optional color:

Black/Custom

Optional specifications

With Touch Screen/Without Touch Screen
Without Refrigerator/Electronic Refrigerator
Compressor Refrigerator

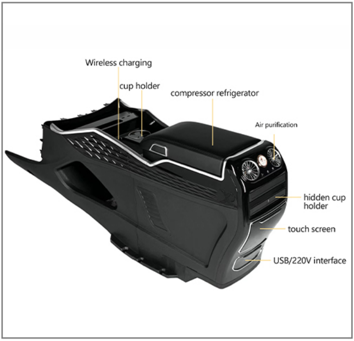
Wireless charging
cup holder
compressor refrigerator
Air purification
hidden cup holder
touch screen
USB/220V interface

DOUBLE OPEN REFRIGERATOR ARMREST BOX

Product name:

double opening refrigerator

Applicable models:

Vito/V-class/Metris/W447

Optional color:

Customize

Optional specifications

Compressor refrigerator

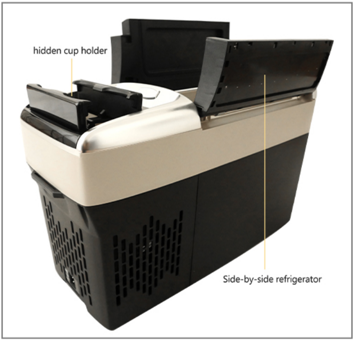
hidden cup holder
Side-by-side refrigerator

PEDAL + ARMREST KIT

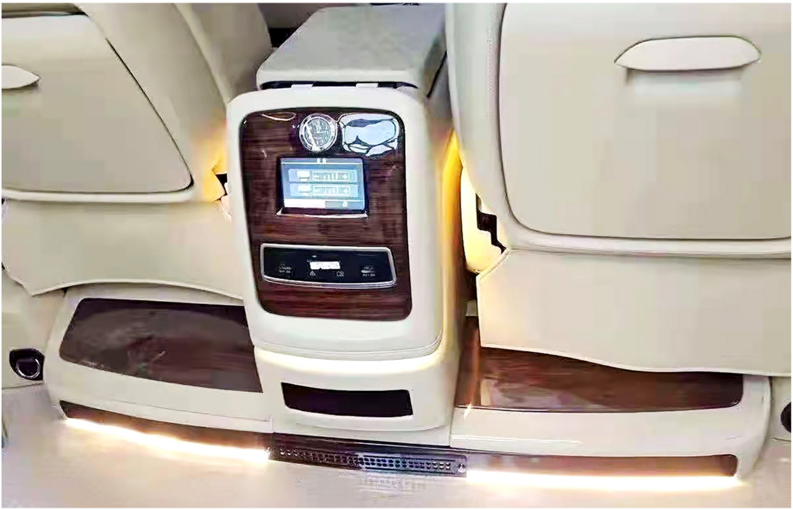

Product name:

Pedal + Armrest Kit

Applicable models:

Vito/V-class/Metris/W447

Optional color:

Customize

Optional specifications

Optional compressor refrigerator

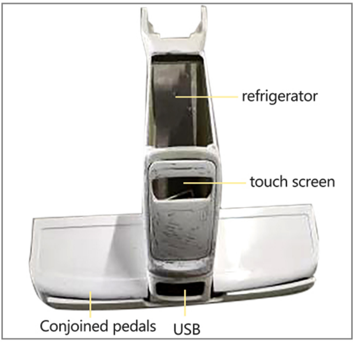
refrigerator
touch screen
Conjoined pedals
USB

APPLY TO SIENNA

METEOR ARMREST BOX

Product name:

Meteor

Applicable models:

Sienna

Optional color:

Customize

Optional specifications

Electronic refrigerator

Compressor refrigerator

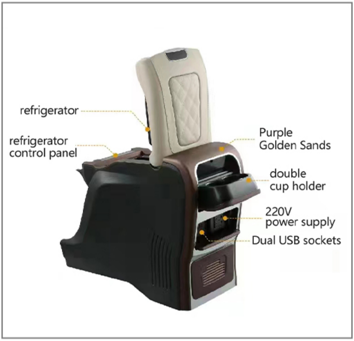
refrigerator
refrigerator control panel
Purple Golden Sands
double cup holder
220V power supply
Dual USB sockets

EXCELLENCE ARMREST BOX

Product name:	
Excellence	
Applicable models:	
Sienna	
Optional color:	
Purple gold/Dai gold stripes	
Optional specifications	
Compressor refrigerator	

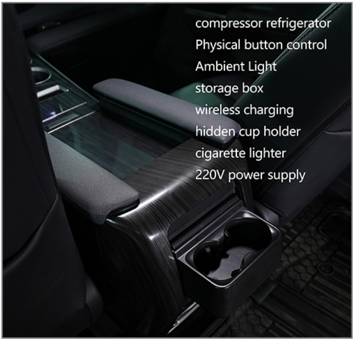
compressor refrigerator
Physical button control
Ambient Light
storage box
wireless charging
hidden cup holder
cigarette lighter
220V power supply

PILOT STYLE HANDRAIL BOX

Product name:

Pilot model

Applicable models:

Sienna

Optional color:

Piano black

Optional specifications

Compressor refrigerator

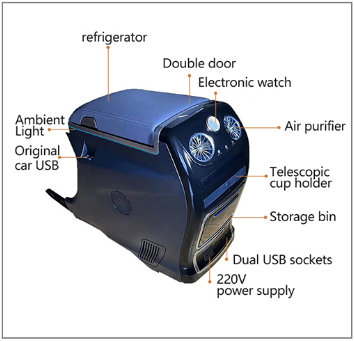
refrigerator
Double door
Electronic watch
Ambient Light
Air purifier
Original car USB
Telescopic cup holder
Storage bin
Dual USB sockets
220V power supply

REVERSIBLE CUP HOLDER

Product name:
Reversible cup holder
Applicable models:
Sienna
Optional color:
Purple gold/Dai gold stripes
Optional specifications
/

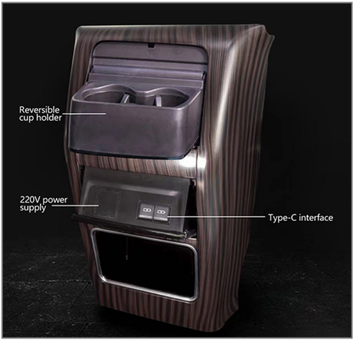
Reversible cup holder
220V power supply
Type-C interface

APPLY TO ELYSION & ODYSSEY

UNLIMITED ARMREST BOX

Product name:

Unlimited

Applicable models:

Elysion & Odyssey

Optional color:

Black/Beige

Optional specifications

Electronic refrigerator
compressor refrigerator

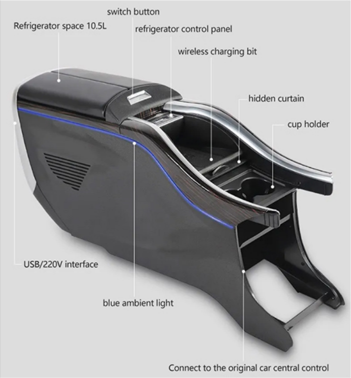
switch button
Refrigerator space 10.5L
refrigerator control panel
wireless charging bit
hidden curtain
cup holder
USB/220V interface
blue ambient light
Connect to the original car central control

METEOR STYLE ARMREST BOX

Product name:

Meteor

Applicable models:

Elysion & Odyssey

Optional color:

Mahogany grain/Silver grey

Optional specifications

Without refrigerator
Electronic refrigerator
Compressor refrigerator

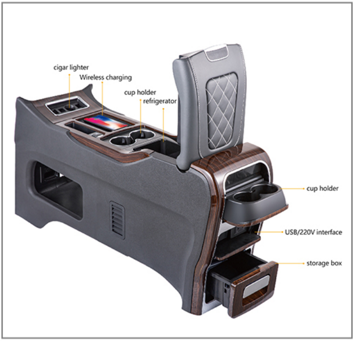
cigar lighter
Wireless charging
cup holder
refrigerator
cup holder
USB/220V interface
storage box

EXCELLENCE ARMREST BOX

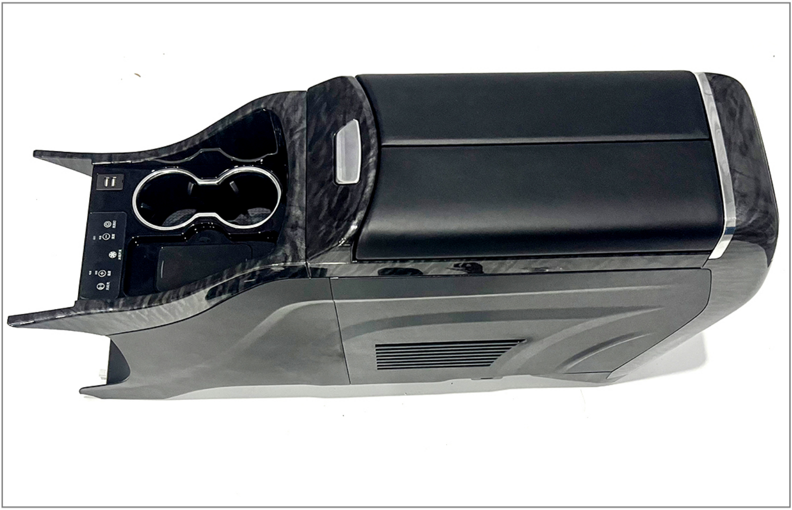

Product name:

excellence

Applicable models:

Elysion & Odyssey

Optional color:

Black

Optional specifications

Without refrigerator
Electronic refrigerator
Compressor refrigerator

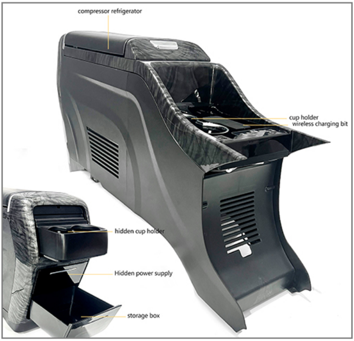
compressor refrigerator
cup holder
wireless charging bit
hidden cup holder
Hidden power supply
storage box

LEVITATE ARMREST BOX

Product name:

levitate

Applicable models:

Elysion & Odyssey

Optional color:

Black

Optional specifications

Without refrigerator
Electronic refrigerator
Compressor refrigerator

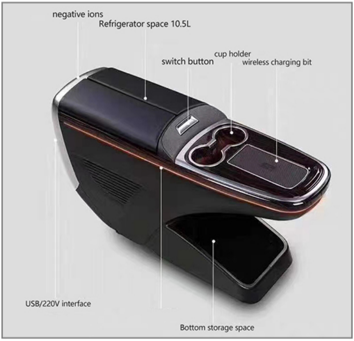
negative ions
Refrigerator space 10.5L
switch button
cup holder
wireless charging bit
USB/220V interface
Bottom storage space

NAVIGATOR ARMREST BOX

Product name:

navigator

Applicable models:

Elysion & Odyssey

Optional color:

Black

Optional specifications

Electronic refrigerator

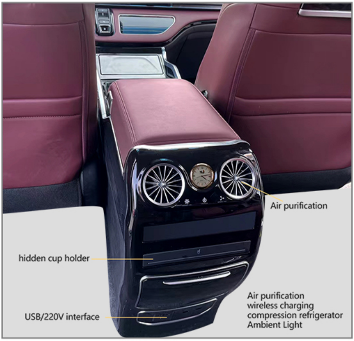
Air purification
hidden cup holder
USB/220V interface
Air purification
wireless charging
compression refrigerator
Ambient Light